THIS DRAWING IS UNPUBLISHED. RELEASED FOR PUBLICATION
© COPYRIGHT BY TYCO ELECTRONICS CORPORATION. ALL RIGHTS RESERVED.

LOC	DIST
CM	00

REVISIONS

P	LTR	DESCRIPTION	DATE	DWN	APVD
	AB	REVISED PER 0G3B-0743-04	26-JAN-05	SH	DB

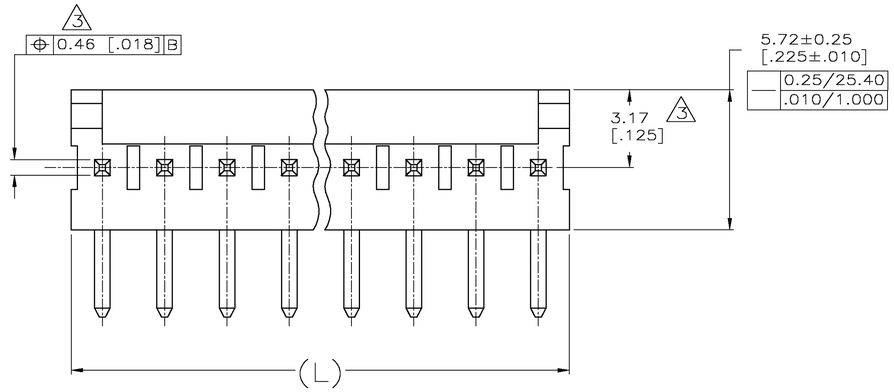

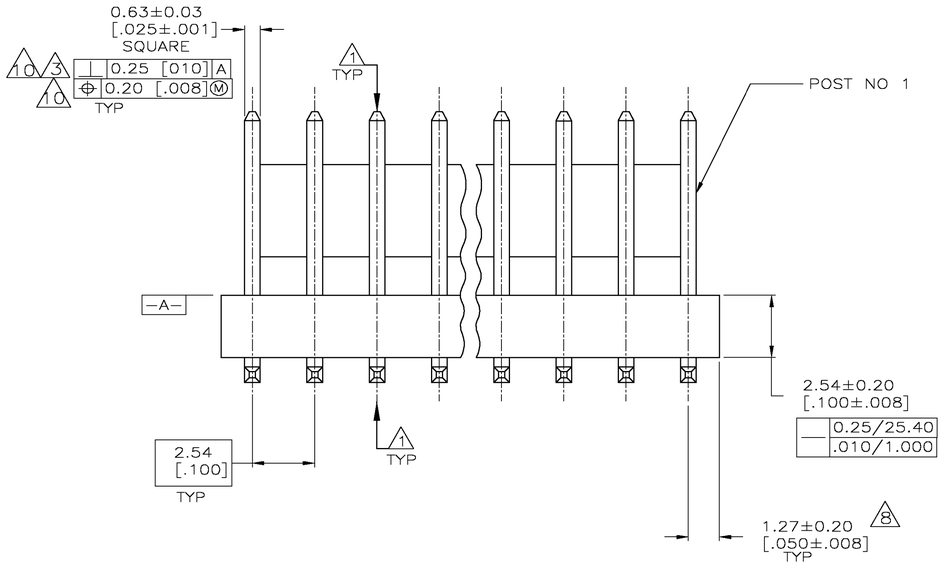

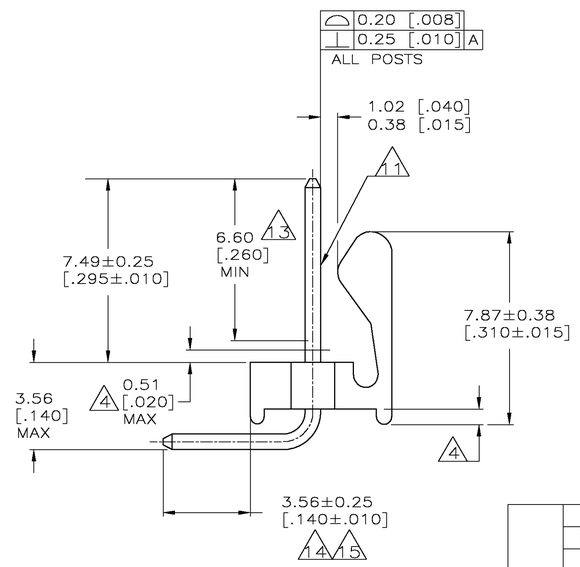

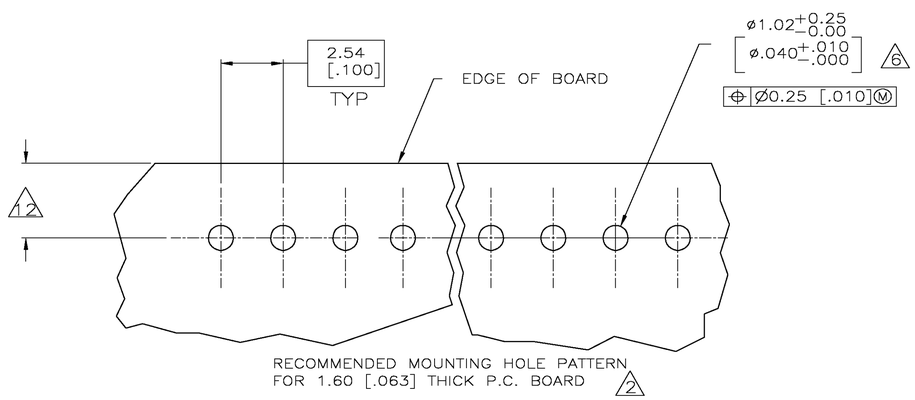

1. POST TO WITHSTAND 13 NEWTONS (3 LBS) MINIMUM AXIAL FORCE IN BOTH DIRECTIONS SHOWN WITHOUT DISLODGING.
2. TOLERANCES APPLY TO SOLDER SIDE OF BOARD.
3. MEASURED AT -A-
4. PLASTIC FLASH PERMITTED IN THIS AREA.
5. PARTS COMPLY WITH AMP SOLDERABILITY SPEC. NO. 109-11-2.
6. ONE HOLE MAY BE UNDERSIZED 0.81-0.89 [.032-.035] DIA. FOR ASSEMBLY RETENTION DURING WAVE SOLDERING.
7. MATERIAL: HEADER-THERMOPLASTIC POLYESTER 94V-0 (NATURAL)
   POST-COPPER ALLOY
   FINISH-USE PLATING NOTES 13 & 14 FOR -2 THRU -28 AND NOTES 13 & 15 FOR -32 THRU -58
8. COORDINATE DIMENSION APPLIES FROM CENTER OF ACTUAL FEATURE.
9. PLASTIC BURRS CAUSED BY CUT-OFF TOOLING ARE PERMITTED WITHIN THE MAXIMUM TOLERANCE ENVELOPE.
10. POSTS TO BE MEASURED WHEN STRIP IS HELD FLAT.
11. POST MUST WITHSTAND TWO 90° BENDS AGAINST EXTRUSION WITHOUT BREAKING.
12. DIMENSION SHOULD BE 2.79-4.06 [.110-.160] MIN WHEN MATING WITH A MTA-100 CONNECTOR ASSEMBLY OR 2.79-3.05 [.110-.120] WHEN MATING WITH A CST-100 CONNECTOR ASSEMBLY.
13. PLATING: GOLD PLATE AREA, 0.00076 [.000030] MINIMUM, ALL SIDES, OVER NICKEL UNDERPLATE, 0.00127 [.000050] MINIMUM, ALL SIDES AND ENTIRE LENGTH OF POST.
14. PLATING: BRIGHT TIN/LEAD (93/7) PLATE AREA, 0.00381-0.00889 [.000150-.000350] THICK, ALL FOUR SIDES 3.56 [.140] MINIMUM.
15. PLATING: MATTE TIN PLATE AREA, 0.00381-0.00889 [.000150-.000350] THICK, ALL FOUR SIDES 3.56 [.140] MINIMUM.

LEAD FREE

DIM (L)	NO.OF POSN	ASSEMBLY
71.12 [2.800]	28	5-641216-8
68.58 [2.700]	27	5-641216-7
66.04 [2.600]	26	5-641216-6
63.50 [2.500]	25	5-641216-5
60.96 [2.400]	24	5-641216-4
58.42 [2.300]	23	5-641216-3
55.88 [2.200]	22	5-641216-2
53.34 [2.100]	21	5-641216-1
50.80 [2.000]	20	5-641216-0
48.26 [1.900]	19	4-641216-9
45.72 [1.800]	18	4-641216-8
43.18 [1.700]	17	4-641216-7
40.64 [1.600]	16	4-641216-6
38.10 [1.500]	15	4-641216-5
35.56 [1.400]	14	4-641216-4
33.02 [1.300]	13	4-641216-3
30.48 [1.200]	12	4-641216-2
27.94 [1.100]	11	4-641216-1
25.40 [1.000]	10	4-641216-0
22.86 [.900]	9	3-641216-9
20.32 [.800]	8	3-641216-8
17.78 [.700]	7	3-641216-7
15.24 [.600]	6	3-641216-6
12.70 [.500]	5	3-641216-5
10.16 [.400]	4	3-641216-4
7.62 [.300]	3	3-641216-3
5.08 [.200]	2	3-641216-2

CONTAINS LEAD

DIM (L)	NO.OF POSN	ASSEMBLY
71.12 [2.800]	28	2-641216-8
68.58 [2.700]	27	2-641216-7
66.04 [2.600]	26	2-641216-6
63.50 [2.500]	25	2-641216-5
60.96 [2.400]	24	2-641216-4
58.42 [2.300]	23	2-641216-3
55.88 [2.200]	22	2-641216-2
53.34 [2.100]	21	2-641216-1
50.80 [2.000]	20	2-641216-0
48.26 [1.900]	19	1-641216-9
45.72 [1.800]	18	1-641216-8
43.18 [1.700]	17	1-641216-7
40.64 [1.600]	16	1-641216-6
38.10 [1.500]	15	1-641216-5
35.56 [1.400]	14	1-641216-4
33.02 [1.300]	13	1-641216-3
30.48 [1.200]	12	1-641216-2
27.94 [1.100]	11	1-641216-1
25.40 [1.000]	10	1-641216-0
22.86 [.900]	9	641216-9
20.32 [.800]	8	641216-8
17.78 [.700]	7	641216-7
15.24 [.600]	6	641216-6
12.70 [.500]	5	641216-5
10.16 [.400]	4	641216-4
7.62 [.300]	3	641216-3
5.08 [.200]	2	641216-2

METRIC

THIS DRAWING IS A CONTROLLED DOCUMENT.

DIMENSIONS: mm [INCHES]

TOLERANCES UNLESS OTHERWISE SPECIFIED:
0 PLC ±
1 PLC ±
2 PLC ± 0.13 [.005]
3 PLC ±
4 PLC ±
ANGLES ±

MATERIAL 7 FINISH 7

DWN S. HOOVER 26-JAN-2005
CHK D. BOSSI 26-JAN-2005
APVD D. BOSSI 26-JAN-2005

PRODUCT SPEC
APPLICATION SPEC
WEIGHT

tyco Electronics
Tyco Electronics Corporation
Harrisburg, Pa 17105-3608

NAME: MTA-100 HEADER ASSEMBLY, FRICTION LOCK, NOTCHED, .025 SQUARE RIGHT ANGLE POST, .000030 GOLD PLATED

SIZE	CAGE CODE	DRAWING NO	RESTRICTED TO
A1	00779	C-641216	

CUSTOMER DRAWING | SCALE 8:1 | SHEET 1 OF 1 | REV AB